An der Bundesstraße 2 49733 Haren/Ems
Germany
Tel. +49(0)5932-7334784
info@globe-fire.de

User's manual

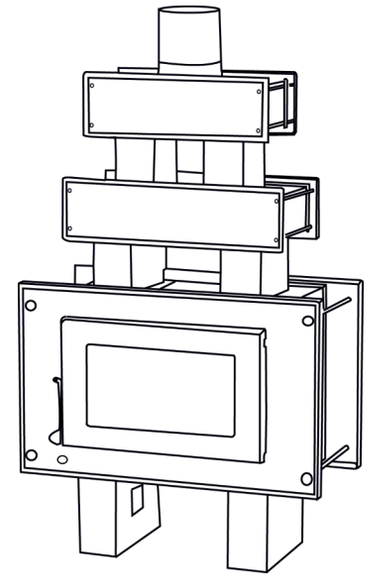

Atria

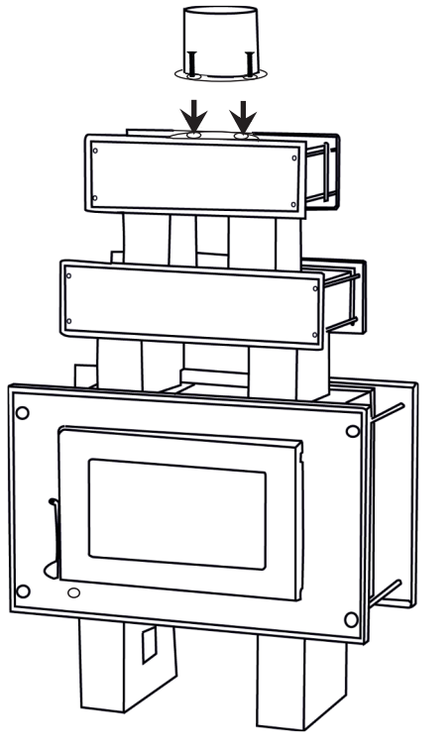

Congratulations on your new **Globe-fire** stove.

Cast-iron stoves have a centuries-old tradition.
At **Globe-fire,** we have been building stoves for six generations.
To ensure you enjoy your wood-burning stove for many years, please read this instruction manual carefully.
It contains all the essential information for the safe use and optimal operation of your stove.

We hope you enjoy many hours of pleasant warmth.

Your **Globe-fire** team

Safety Instructions

The user is required to read the manual thoroughly and to acquaint themselves with the correct operation of the appliance before use.

Burn hazard:
During operation, the appliance's external surfaces reach very high temperatures. Always wear heat-resistant protective gloves when operating the stove door, ash drawer, or any control elements. Children must be warned of the hazard and kept under supervision. Keep children and animals at a safe distance from the stove when lit.

Safety distance:
Maintain the prescribed minimum safety distances to all combustible materials at all times. This includes, amongst other flammable materials, walls, furniture, and textiles (e.g., curtains).

Flue gas safety:
Keep the stove door closed during operation to prevent flue gases from entering the room. Open the door only after the fuel load has burned down to a stable ember bed and the wood's degassing phase is complete.

Combustion/deflagration hazard:
Do not fully close the combustion-air supply while visible flames are still present. Keep the secondary air slider partially open during this phase; never shut it completely. Closing the air supply during the burning phase can allow unburned gases to accumulate and ignite suddenly. Close the air supply only after the fuel has burned down to a stable ember bed with no visible flames, and you do not plan to refuel.

Air supply:
A sufficient supply of fresh air must be ensured for stoves that draw combustion air from the room. Ventilation systems, extractor hoods, or other fireplaces must not impair the air supply.

Fuel:
Model ATRIA is approved exclusively for use with natural, untreated firewood. The combustion of waste materials (e.g., plastic) or non-approved fuels (e.g., varnished wood) is strictly prohibited as it constitutes a safety hazard and causes harmful emissions. Never use flammable liquids (accelerants) to light a fire.

Chimney draught:
Safe operation requires an adequate and stable chimney draught. Draught may be impaired in transitional seasons and adverse weather conditions (e.g., fog, strong winds, temperature inversions); factor this into operation.

Ash disposal:
Ash can contain live embers long after the fire is extinguished. Therefore, collect ash in a non-combustible, lidded metal container. Store the container outdoors, at a safe distance from any flammable materia**ls.**

Installation and operating instructions for model Atria

1. General installation notes

Transport the stove carefully. Ensure it is neither tilted nor turned upside down.
If the stove is transported without packaging, place a soft pad (e.g., cardboard or felt) between the stove and the transport equipment to prevent damage.

Model Atria is supplied with pre-assembled feet; lift the stove rather than dragging it to avoid damage to the feet.

Before positioning the appliance, check if the supporting structure can support the stove's weight. If the stove is too heavy for the structure, take appropriate measures (e.g., use a plate to distribute the load).

Before installing and connecting the stove, have the chimney checked for suitability.
This check must cover both compliance with building regulations and technical/physical suitability. Ask a qualified chimney sweeper or installer to carry out this assessment. Note: the chimney must be erected as an independent, self-supporting structure and must not rest on the stove.

Connect the stove to the chimney using a suitable connecting piece (flue pipe). Route the flue pipe with as few bends as possible. The pipe should run upward or vertically to allow proper discharge of flue gases; a horizontal run is the minimum acceptable alternative.
A downward fall is not permitted. All connections must be installed airtight and must be accessible for cleaning (e.g. by providing sufficient cleaning openings).

Model Atria is designed and tested as a room-air-dependent appliance.
Thus, ensure an adequate supply of fresh air. Model Atria is fitted with an external air input; therefore, an optional outdoor air duct can be installed (always in accordance with national regulations).

The appliance is suitable for installation on a shared flue gas system (in accordance with German regulations). Local, national, and European building and safety regulations must be observed. Inform the locally responsible authority about the planned installation in advance (e.g. in Germany: the chimney sweeper).

2. Safety distance to combustibles

Maintain the following minimum distances to combustibles:
Back: 50 cm
Sides: 40 cm
Front (viewing window): 120 cm

Also note the required safety distances for the flue pipes; please follow the manufacturer's instructions or seek advice from your chimney sweeper/installer.
For possible options to reduce these distances — for example by installing a heat shield with air circulation on both sides — please consult your chimney sweeper/installer.

To ensure proper air circulation and a sufficient supply of fresh air, we recommend maintaining a minimum distance of 5 cm even from non-combustible materials.

Also, do not install the appliance directly on combustible or heat-sensitive flooring. In such cases, a non-combustible hearth plate / covering must be used. This must extend at least 50cm in front of the door opening, and at least 30 cm to each side beyond the door opening. Always follow local and national fire-safety regulations when selecting and installing floor protection.

3.Approved Fuel

The Atria appliance is intended for use with natural, untreated firewood.
Use wood with a maximum residual moisture of 20% (based on dry weight).
Wood with higher moisture burns significantly worse and less cleanly.
In addition, much of the fuel's heating energy is consumed by drying/evaporating the moisture and is therefore lost for heating the room. Also, make sure your wood is not too old. Old wood has already released a significant proportion of its gases into the environment and therefore provides little heating power. This can result in your stove not reaching the required operating temperature and burning poorly.
We recommend using wood that is not younger than two years and not older than five years (split; stored dry and well ventilated).

Burning unsuitable fuels or waste, especially plastic, is prohibited, as such practice is harmful to health, can damage the stove, and cause odour complaints.

Warning: Never use petrol, methylated spirits, or similar liquids to light a fire or to rekindle it (serious risk of burns!). Also ensure that such liquids are always kept away from the appliance while it is in operation.

4. Operation

4.1 Commissioning
During the initial firing, the curing of the stove paint may produce an unpleasant odour and a faint blue haze. It is therefore recommended to thoroughly ventilate the room during the first firing (e.g. open windows and doors). The paint cures whenever the appliance reaches its maximum operating temperature for the first time. It is therefore essential to heat the stove quickly to a high operating temperature. This completes the curing process promptly and minimizes unpleasant odours.

4.2 Lighting the stove
When lighting the stove, open both the primary and secondary air sliders fully, as well as the rotating grate.
As soon as the fire is stable and burns evenly, close the primary air slider and the rotating grate; from this point onwards, control the burn via the secondary air slider.
To ensure an efficient flue draught, open any throttle valve in the flue pipes (if fitted), as the chimney must first reach a sufficient temperature to establish proper draught.
Lighting the stove correctly keeps the viewing glass clean and largely free of soot (air-wash effect). See page 12 for detailed best-practice lighting instructions.

Caution: Never leave the stove unattended during the lighting phase.

4.3 Refuelling
Refuel only when no flames are visible and a stable ember bed remains; at this stage, the wood's degassing is complete and the risk of smoke spillage is minimised. Open the stove door slowly and carefully, then rake the embers into an even bed before placing new logs on top. Arrange the logs with a bit of space in between to maintain adequate air circulation, and do not pack them tightly. If required, open the primary air briefly to assist ignition and close it again as soon as the new load is well alight.

4.4 Stove out of operation (cold)
If the wood-burning stove is cold and not in use, the primary and secondary air sliders should remain closed in order to avoid the loss of warm room air.

4.5 Additional notes
It is essential to note that heavily throttled, low-load operation is not possible with wood. This means, in practice, that the air supply (secondary air slider) must not be excessively or completely closed, as wood only burns efficiently and cleanly with a continuous supply of oxygen. Other improvised forms of throttling, such as wrapping fuel in damp newspapers, are also not permitted, as they can lead to soot build-up in the chimney and, in the worst case, chimney fires.

5. Heating during transitional periods

When the outdoor temperature exceeds the temperature within the chimney, flue draught can be weak, as thermal buoyancy is only present when the outside air is colder than the flue gases inside the chimney.

Under these conditions, favour thinner split logs rather than large pieces; they ignite quicker, burn faster, and provide short bursts of higher output to help establish draught.
Note: this does not mean lighting with kindling alone! The fire chamber must still be loaded with a sufficient amount of fuel. In addition, the recommended lighting method described on page 12 must always be followed.

To assist the chimney in warming up during transitional periods, fully open the primary air slider and leave it open for longer than usual during initial firing. This allows the fuel to burn more vigorously, enabling the flue gases to reach a higher temperature more quickly.

Once stable combustion and draught are achieved, revert to normal settings.

6. Cleaning and maintenance

6.1 Cleaning the flue-gas passages
Clean the Atria at least once a year—and more often if operating conditions demand—to maintain reliable operation. Inspect the internal flue-gas paths, including the flue collar and the areas above the baffle plate, and remove any deposits.
Check the flue pipes regularly for soot or tar build-up; this inspection is typically not included in the chimney sweeper's routine. During cleaning, also check the condition of the sealants and repair any damage before operating the stove again.
To avoid missed maintenance, we recommend coordinating the cleaning of the appliance's flue-gas paths and flue pipes with the scheduled chimney sweeping.
Your local chimney sweeper can advise on the applicable sweeping intervals (at least once a year, or more often).

6.2 Cleaning the viewing window
Some misting of the glass is inevitable over time. However, model Atria incorporates an air-wash system that helps keep the ceramic glass clear; persistent blackening or heavy soot deposits indicate sub-optimal lighting technique or unsuitable fuel.
Clean the ceramic glass only with a suitable glass cleaner. Do not use caustic or abrasive products, as they can etch the surface and leave permanent marks. After applying the cleaner, wipe away any residual dirt with a damp cloth and dry thoroughly.

6.3 Cleaning the appliance
The appliance is finished with a high-temperature-resistant coating.
Once the coating has cured, the surface can be cleaned by wiping it with a dry, soft cloth or by gently brushing it with a soft hand brush. If rust spots or similar blemishes occur—for example, from spilt tea water—remove them with fine steel wool (do not use sandpaper) and then touch up the area with suitable high-temperature stove paint.

7. Spare parts

Use only spare parts approved or supplied by the manufacturer.
Modifications to the appliance are not permitted!

To identify the correct parts, visit www.globe-fire.de, open “Spare Parts & Accessories”, and select your stove model to view the available items.
When ordering, always quote the art. nr., model designation, and—where applicable—the stove variant (left or right).

Prices are available upon request via our online contact form or by email at info@globe-fire.de. You can also obtain spare parts through your dealer.

8. Chimney fire (prevention and response)

Prevention is paramount when it comes to chimney fires: operate the appliance correctly, using only dry, natural firewood, and ensure the stove and flue paths are cleaned at the prescribed intervals to minimize soot/tar build-up.

If a chimney fire does occur, keep calm and take the following actions immediately:

- Keep calm!
- Close all combustion-air controls!
- Call the Fire Brigade under the emergency number!
- Remove flammable items (including furniture) from the vicinity of the chimney along its full height on every floor!
- Notify your chimney sweeper!
- After the fire has burned out, have the chimney inspected by a professional for damage before returning the appliance to service!

Warning: Never extinguish with water – the sudden build-up of steam pressure can cause severe damages!

9. Chimney cross-section calculation

For a chimney to have an optimal draught, it must have a sufficient effective height and a suitable cross-section.
The optimal dimensions depend on the specific appliance and installation conditions.
Your chimney sweeper / installer will determine whether such a calculation is necessary.
The data needed for that calculation are provided below.

Information for the chimney cross-section calculation	
Nominal heat output	9,1 kW
Flue gas outlet temperature	286 °C
Flue gas mass flow	9,4 g/s
Flue draught	12,2 Pa
Mean Co2-concentration %	8,42 %

Sustainability

As a sixth-generation manufacturer and craft business, we place a high priority on the sustainability of our work and products. Our appliances are built from materials such as cast iron that can be recovered by recycling facilities at end of life.
Before recycling becomes necessary, you can order and fit spare parts through us or one of our dealers to restore function and extend the service life of your appliance, thereby avoiding premature disposal.
You can further prolong the appliance's life by operating it correctly, using only suitable dry fuel, and carrying out routine cleaning and maintenance at the prescribed intervals.
If decommissioning is unavoidable, arrange for responsible end-of-life handling by contacting your local recycling centre to determine how the appliance and its materials should be recycled or disposed of.

Guarantee

Globe-fire provides a **24-month** guarantee on the supplied appliance.
The guarantee covers the proper functioning of the appliance and includes free replacement of the spare parts where a material or workmanship defect is present. There is no obligation to remedy the defect by performing work such as fitting or installation.

Excluded from this guarantee are parts subject to normal wear and tear, as well as parts that are directly exposed to the flames, e.g. ceramic viewing glass, sealant, grates, baffle plates, firebrick linings, and paint damage.
Damage resulting from improper use—such as overheating, failure to follow the operating instructions, or use of unsuitable fuels—is also not covered.

Repairs carried out under this guarantee do not extend the original guarantee period.

The guarantee period commences on the date of the invoice.

The right of return expires after commissioning (first firing).

Any complaints must be reported to the dealer from whom the appliance was purchased.

Faults	Causes	Solutions
The stove develops smoke on the top plate and smells.	1 This only occurs when the paint is curing (lighting for the first time).	1 Light the fire up high and open all doors and windows. See ``4.1 Commissioning`` page 4.
The stove has not enough chimney draught when lighting the fire. Fire will not burn.	2 Air supply is closed. 3 Throttle valve is closed. 4 Wood too wet or too old. 5 Not enough fuel; wood is to small or not enough wood. 6 External air pipe is too close to the wall. 7 Unfavourable weather. 8 No chimney draught. 9 Chimney is dirty or has an air lock.	2 Open air sliders. 3 Open throttle valve. 4 Only use natural, untreated firewood between 2 and 5 years old. 5 See page 12 ``**Globe-fire** lighting instructions``. 6 Increase distance between wall and stove. 7 Occurs seldom. See ``heating during transitional periods`` page 5. 8 & 9 Check the chimney for leaks. Seal any fireplaces connected to the same chimney tightly. If necessary, consult a chimney sweeper.
When adding wood smoke enters the room/ smoke spillage.	10 Refueled too soon. 11 Throttle valve is closed. 12 Soot or tar build-up in stove pipes / flue gas passages. 13 No chimney draught.	10 Only refuel when fire has burnt down to a stable ember bed. 11 See point 3. 12 Clean the appliance. 13 Contact chimey sweeper.
Persistent blackening/ soot build-up on stove glass.	14 Incorrect lighting technique/ not enough temperature. 15 Too heavily throttled. 16 Wood too wet or too old.	14 See point 5. 15 Open throttle valve and air sliders. 16 See point 4.

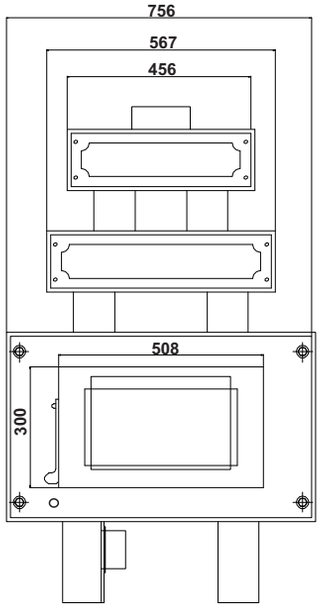

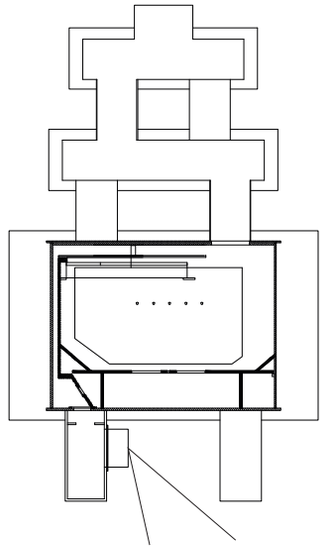

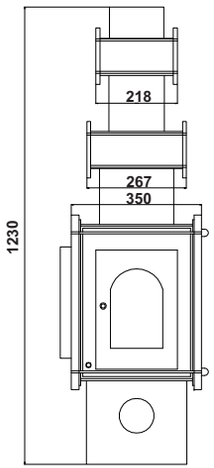

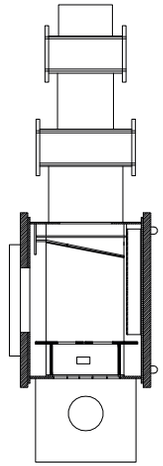

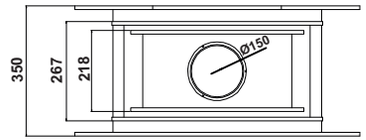

Weight:
ca.180 Kg

Parts

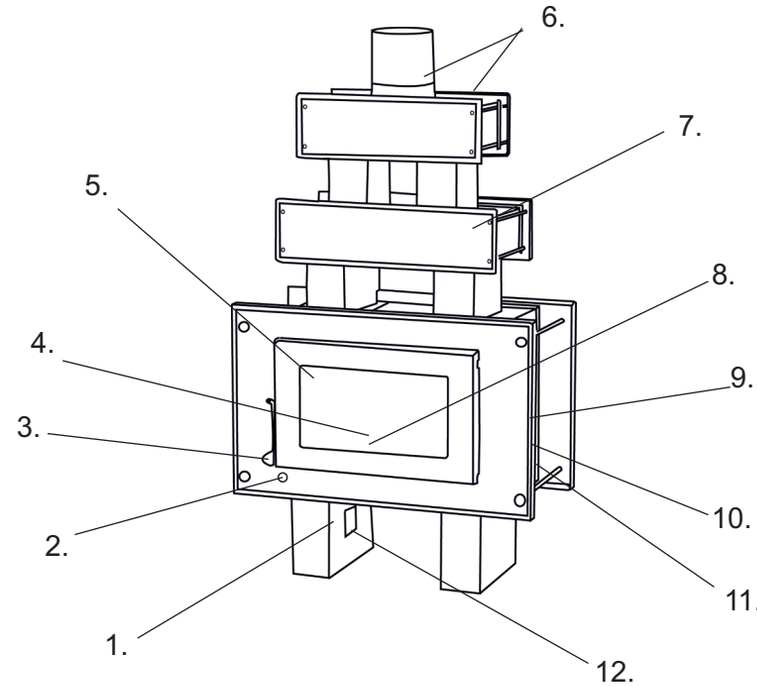

1. Secondary air slider
2. Primary air slider
3. Front door
4. Rotating grate
5. Stove window
6. Flue collar
7. Cleaning opening
8. Stove fence
9. Stove side door
10. Rotating grate
11. Ash tray
12. External air supply (foot)

Globe-Fire lighting instructions

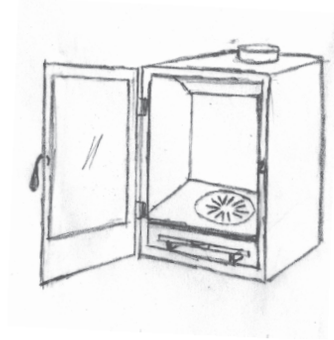

Open the primary and secondary air sliders.
Ensure that any throttle valve installed is fully open.

1. Open the rotating grate and clear deposits from the holes. Leave any ash residues lying if they do not obstruct the air supply —they provide thermal insulation and can speed up ignition.

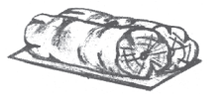

2. Place two pieces of firewood on the grate.

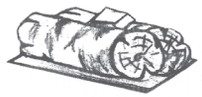

3. Place a firelighter on the wood.

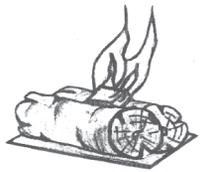

4. Light the firelighter.

5. Immediately lay two more pieces of firewood crosswise over the lower ones and close the stove door. For stoves with larger combustion chambers, add additional wood as needed.

Once the stove is hot (approx. 20 - 25 minutes), close the rotating grate and the primary air slider. From this point onwards, the combustion should be controlled using the secondary air slider only (the optimal setting will depend on your specific installation).

Only open the door when the load has burned down to a stable ember bed and no visible flames remain. Refuel as needed.

- Globe fire -

Ch.Leibfried GmbH
An der Bundesstraße 2, D-49733 Haren (Ems), Germany

Room heater: EN 16510-2-1
Space heating appliance fired by solid fuel

Type	Room heater ST-2013 Atria (Intermittent burning)
Declaration of performance Nr.	013-CPR-07042025
Test laboratory Nr.	1639
Test report Nr.	EZKA/2024-08/00005-4A
Heat output	
Efficiency	79,5 %
Nominal heat output	9,1 kW
Heat output range	8 - 10 kW
Fuel	Wood
Emissions	
CO	≤ 1250 mg/m³
NO_x	≤ 200 mg/m³
OGC	≤ 120 mg/m³
Dust (PM)	≤ 40 mg/m³
Flue gas temperature	238 °C
Flue gas mass flow	9,4 g/s
Fire safety	
Reaction to fire	A1
Minimal distance to combustible materials:	Rear: 50 cm Side: 40 cm Front: 120 cm
Mechanic solidity	Fulfilled
Surface temperature	Fulfilled
VKF - Switserland	Declaration of performance

1. BImSchV - Stufe 2	**Fulfilled**	CE 25
Ecodesign 2022	**Fulfilled**	

The appliance is suitable for installation on a shared flue gas system

Read and observe the instructions in the user‘s manual